searchlight

ASSEMBLY INSTRUCTIONS

IP44
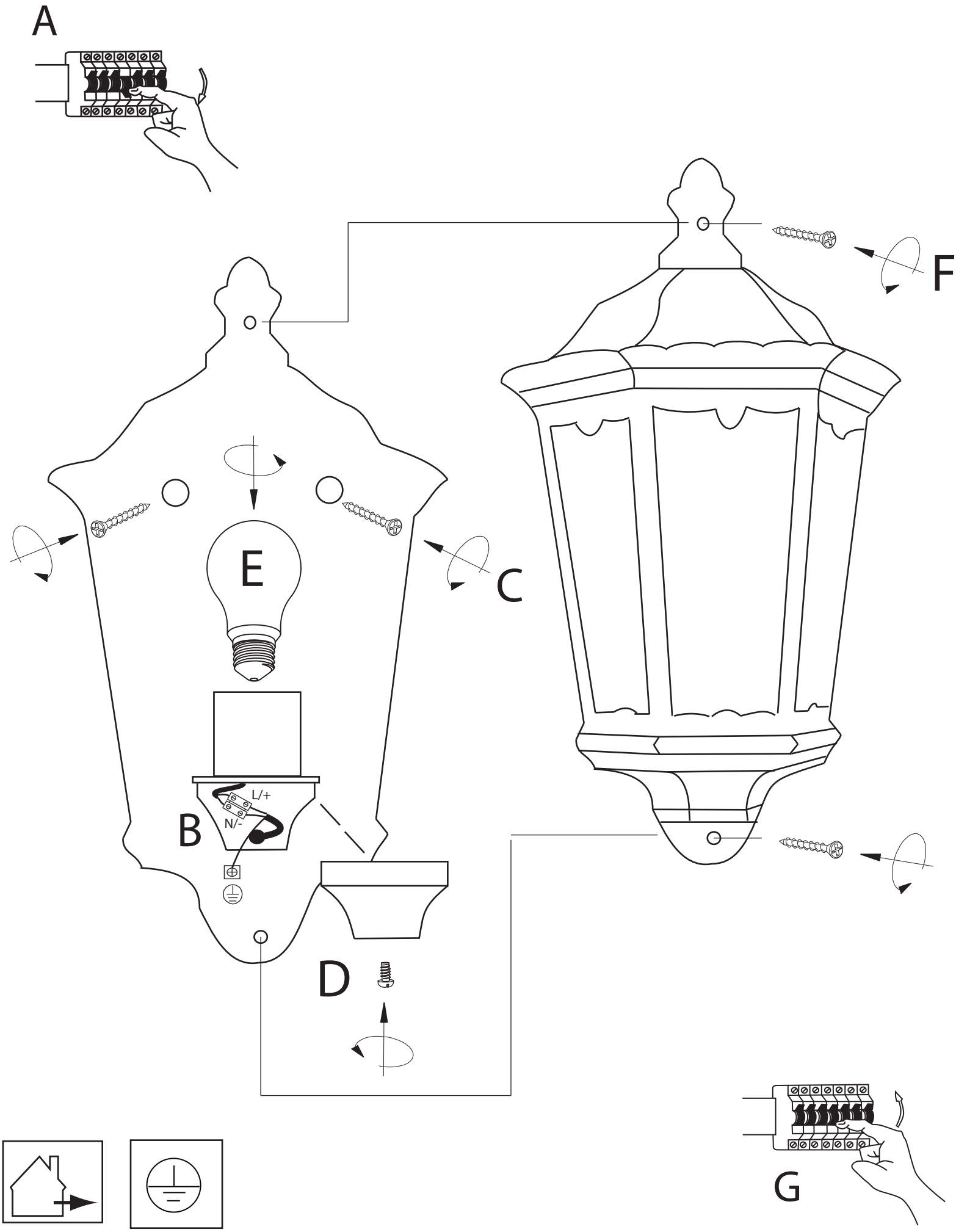
82505BK
QL00994