searchlight

ASSEMBLY INSTRUCTIONS

IP 44

82531BK
QL 01039

CE

A

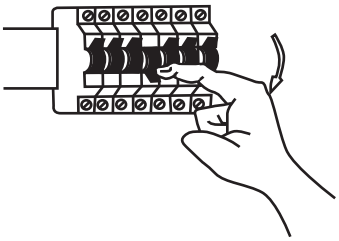

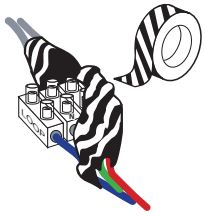

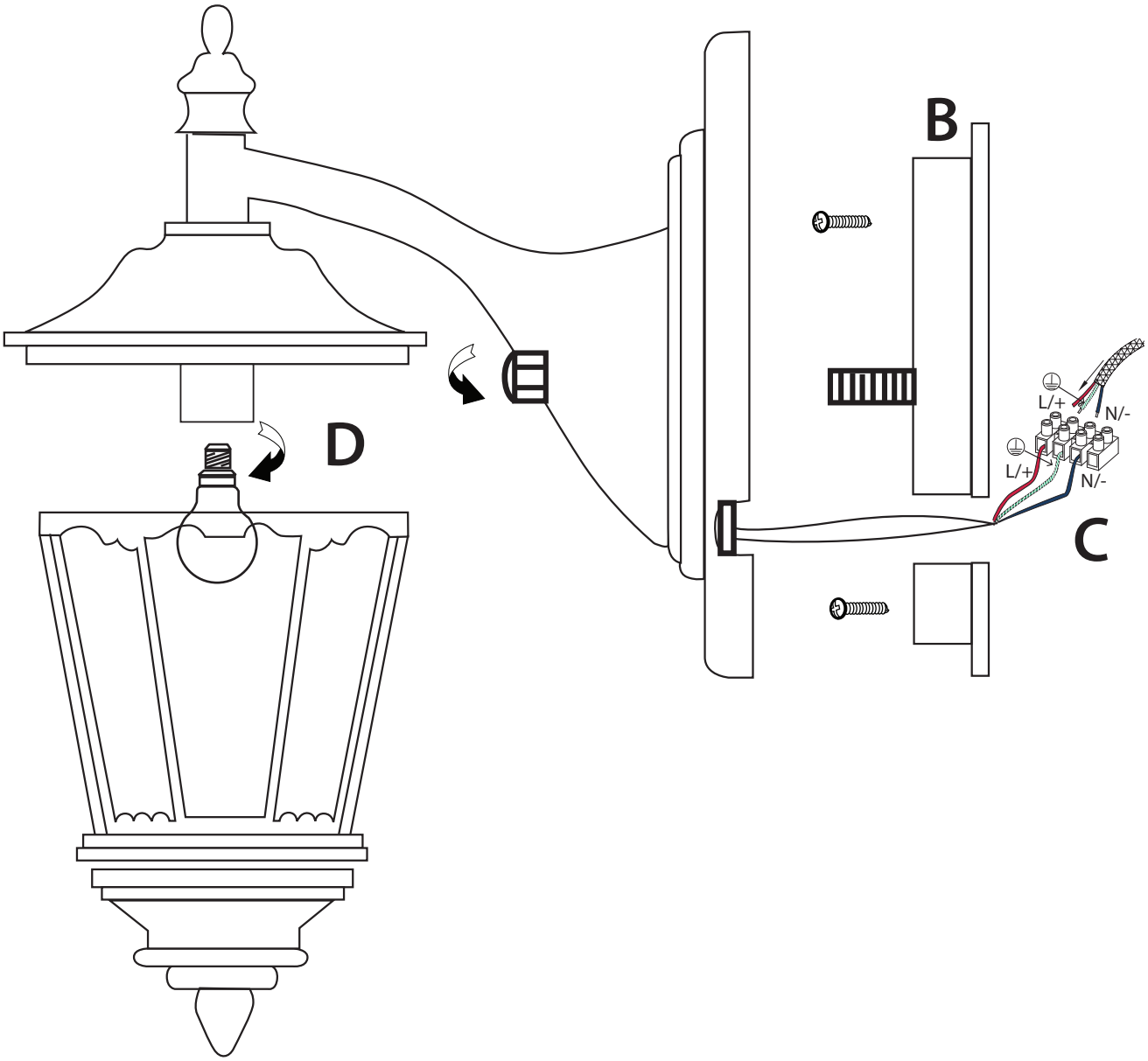

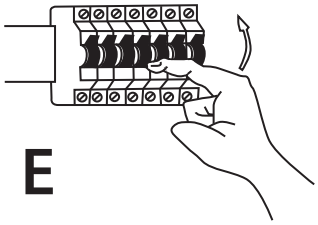

E