searchlight

ASSEMBLY INSTRUCTIONS

3094-4/3096-6
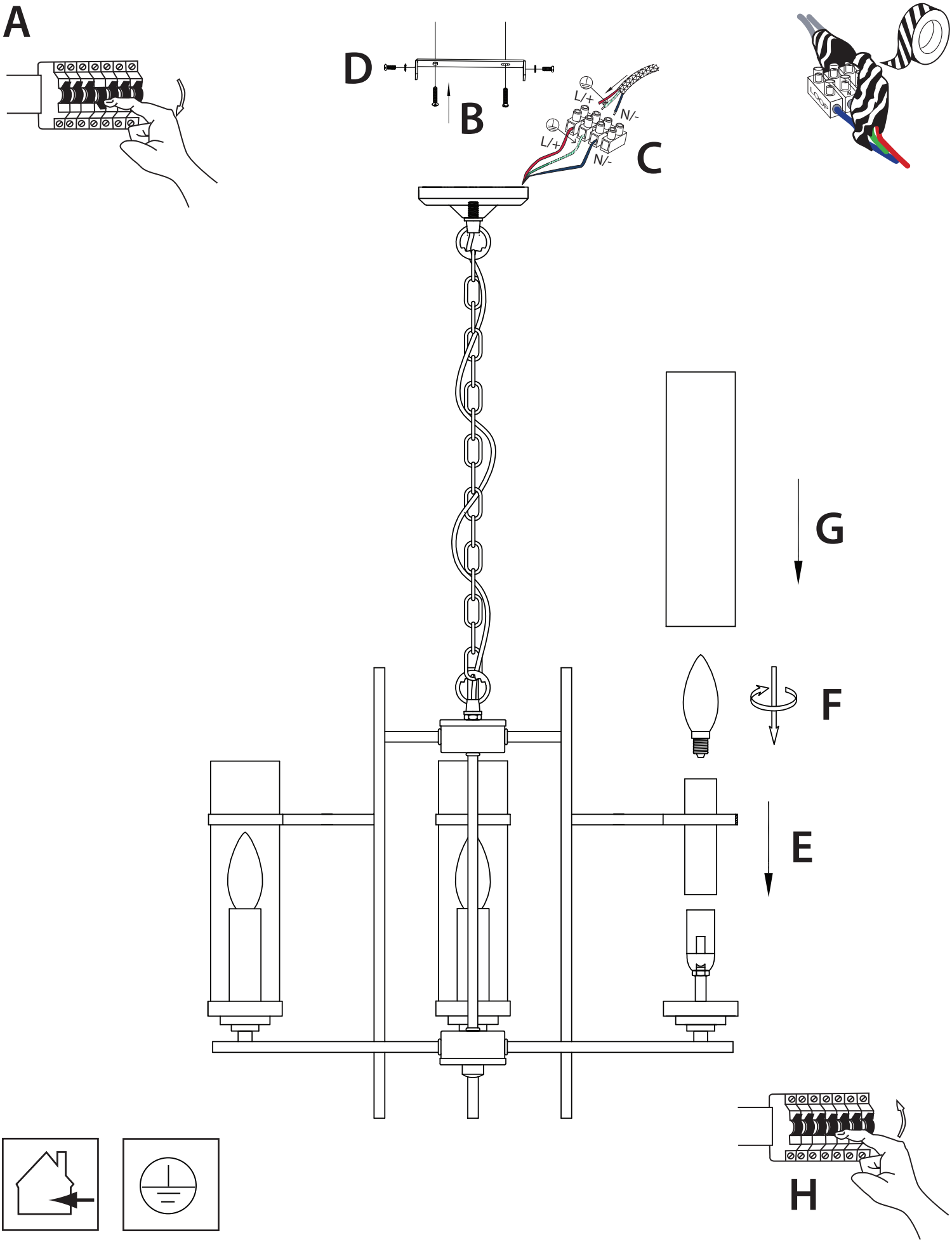
QL 01122