2.9A – 2.9B

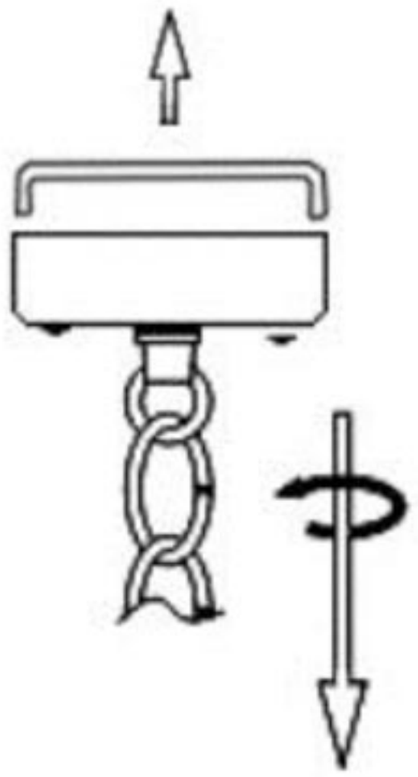

2.9C

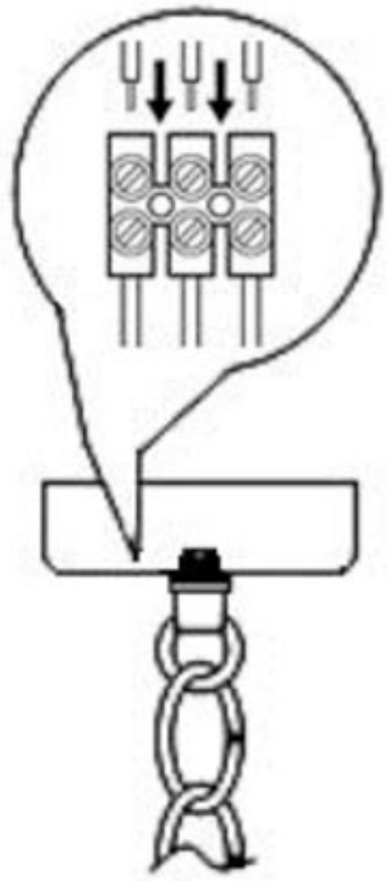

2.9D

2.9E – 2.9F

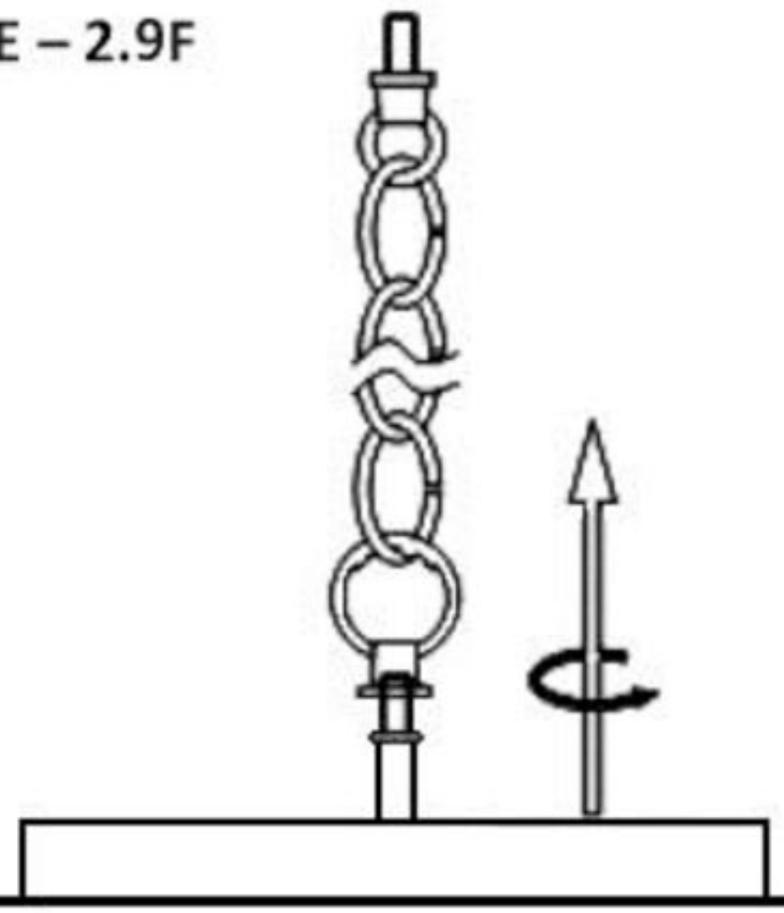

2.9G

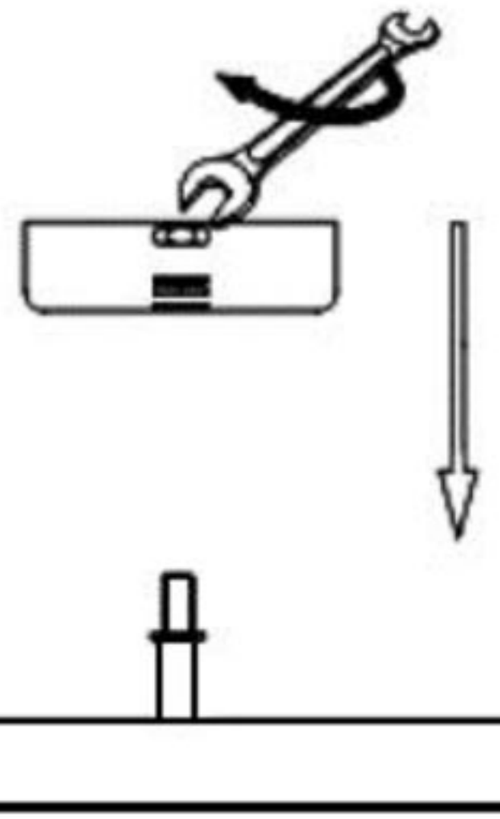

2.9H – 2.9I

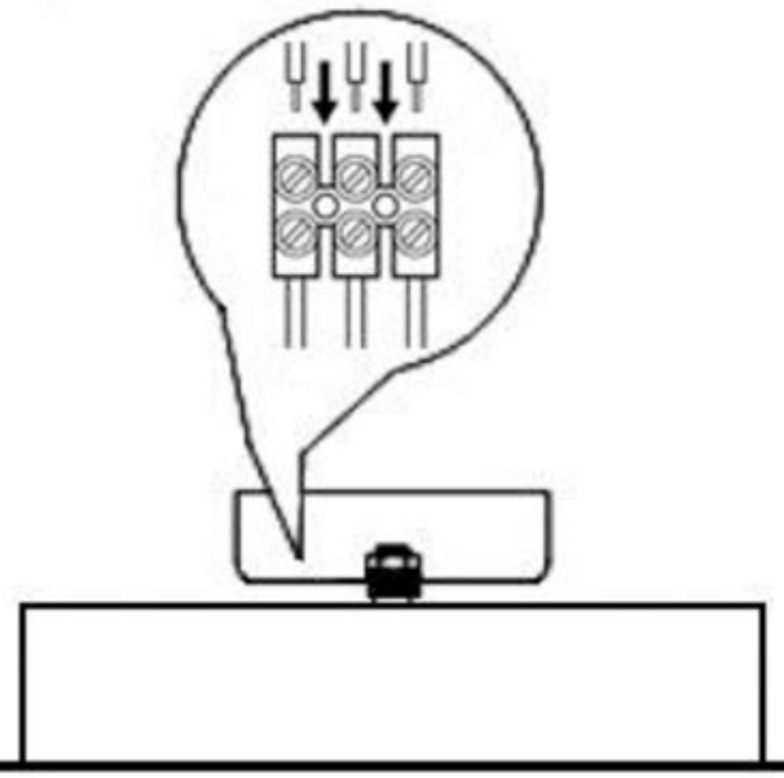

RAFFERTY

DUAL MOUNT FITTING

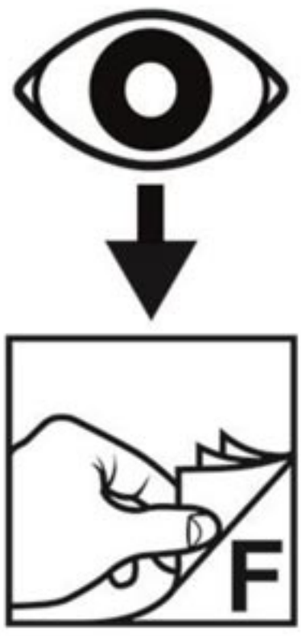

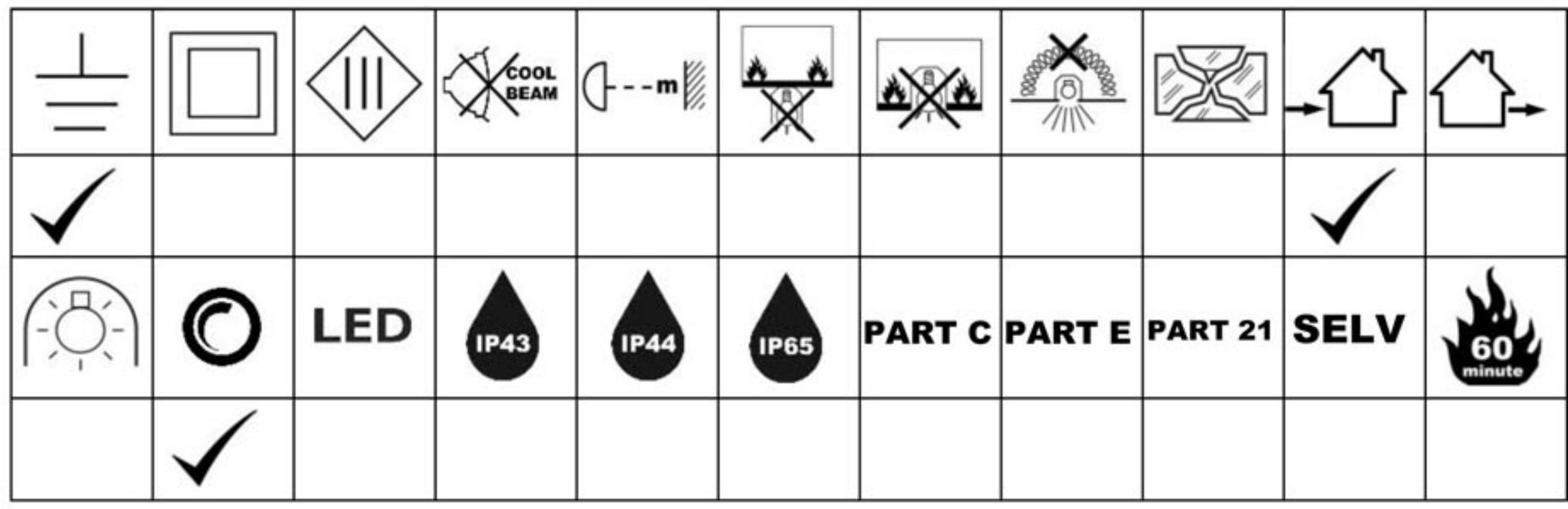

1 – 1.A

1

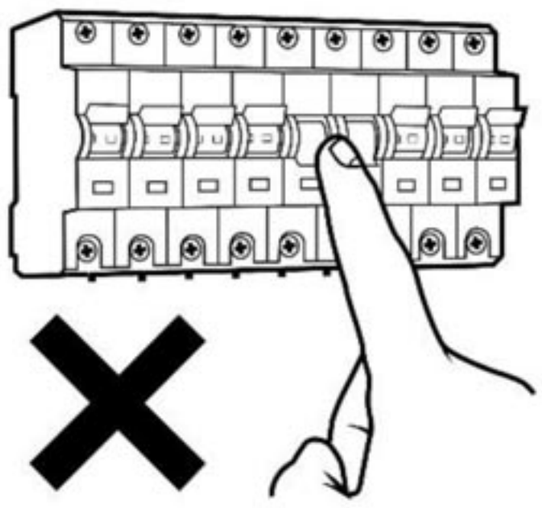

2.1

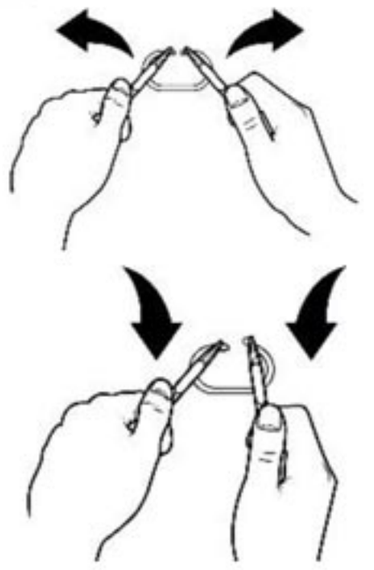

2.9

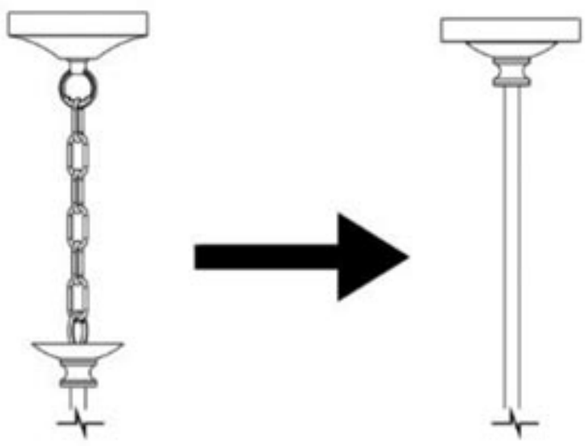

3.1 – 3.3

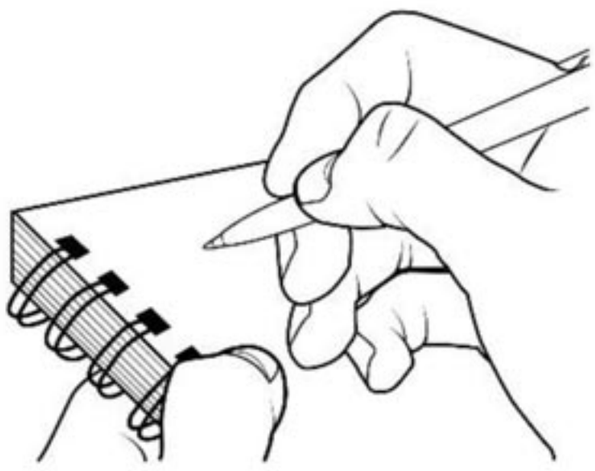

3.4

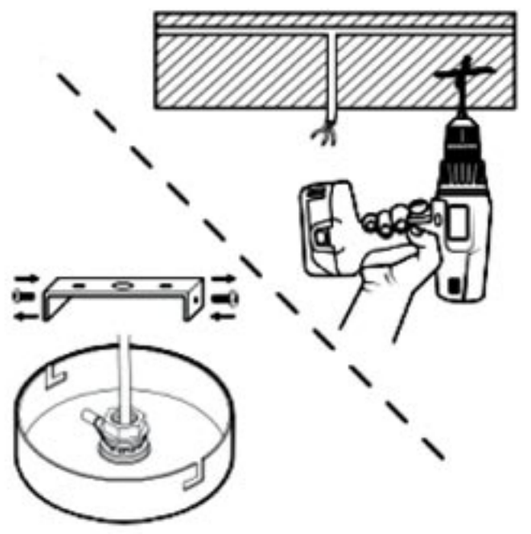

3.5

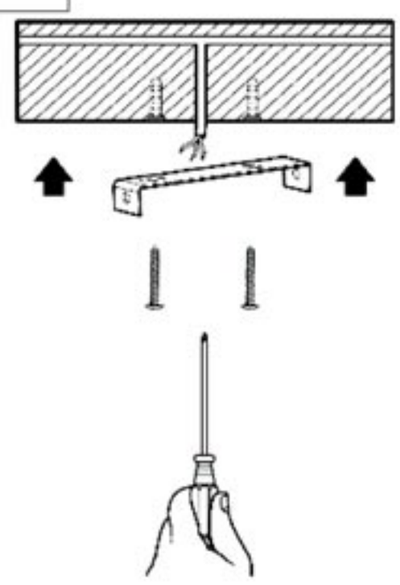

3.6, 3.8 – 3.11

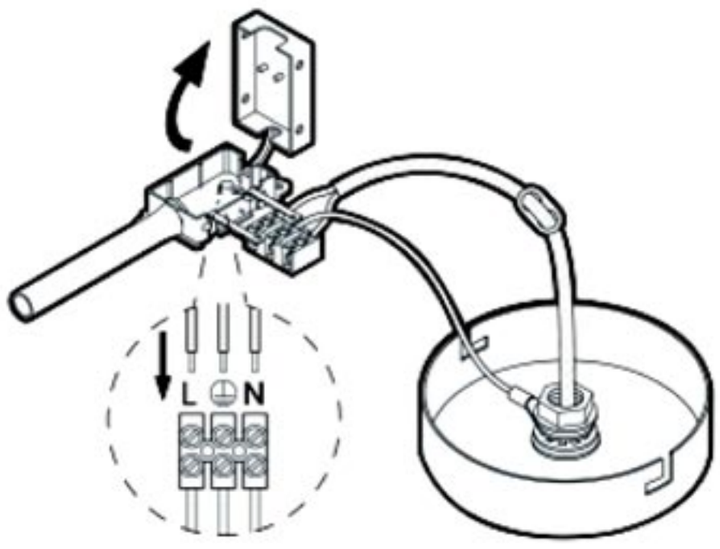

3.13 – 3.14

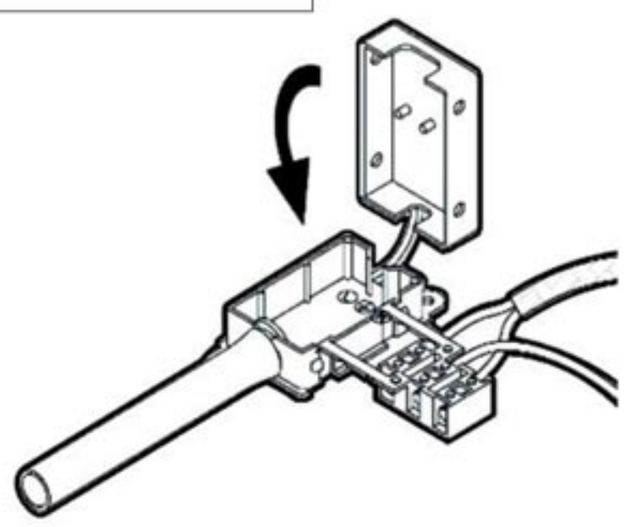

3.16 – 3.17

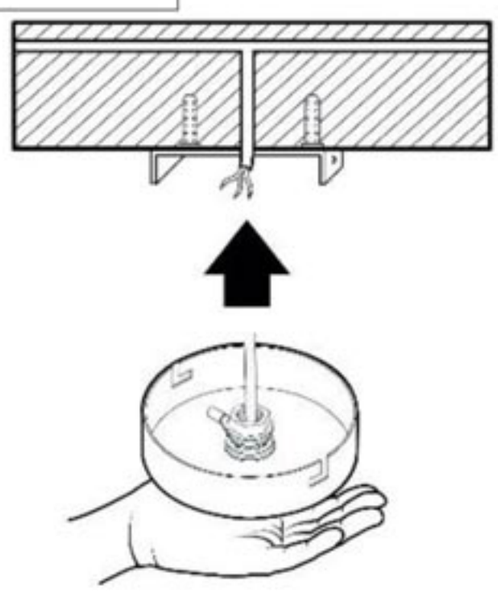

3.18

3.19

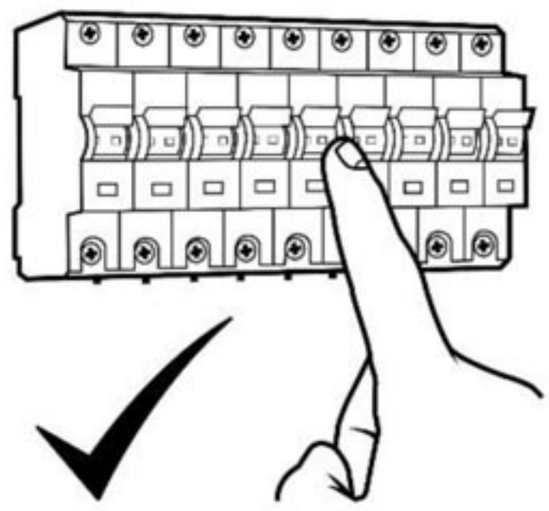

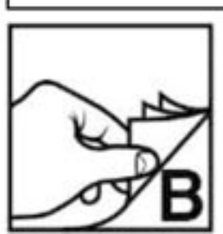

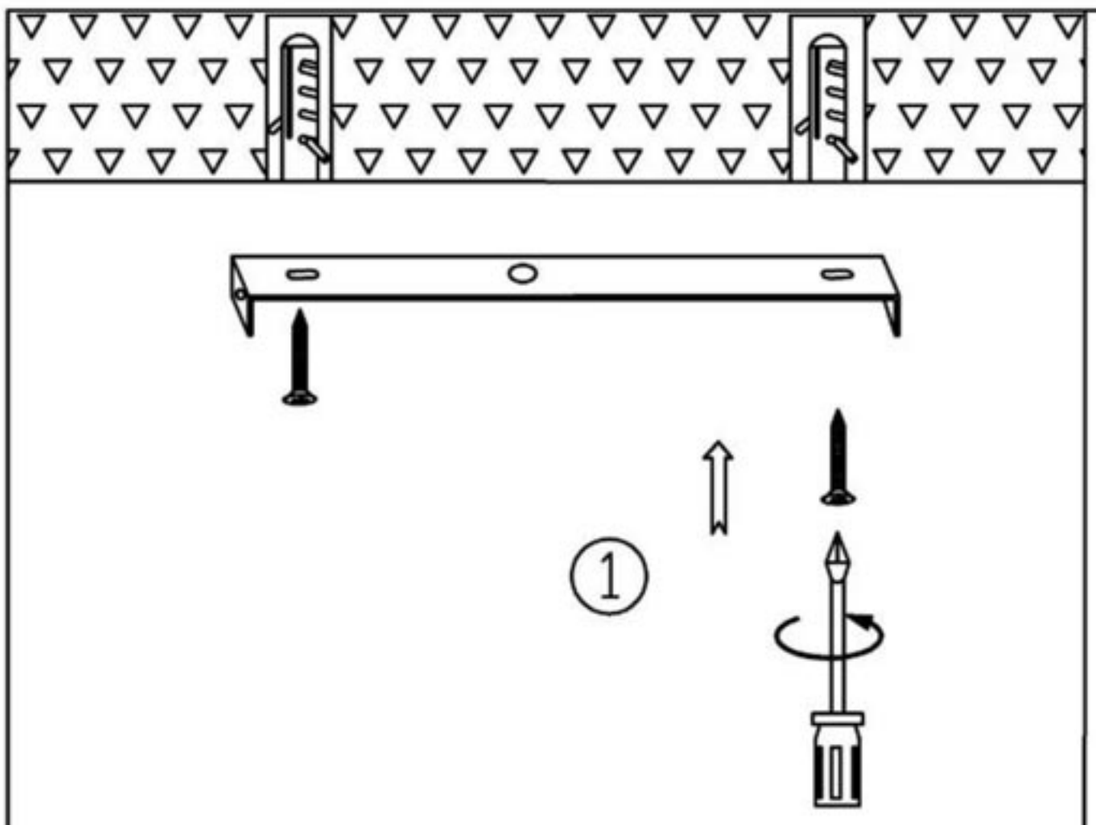
①

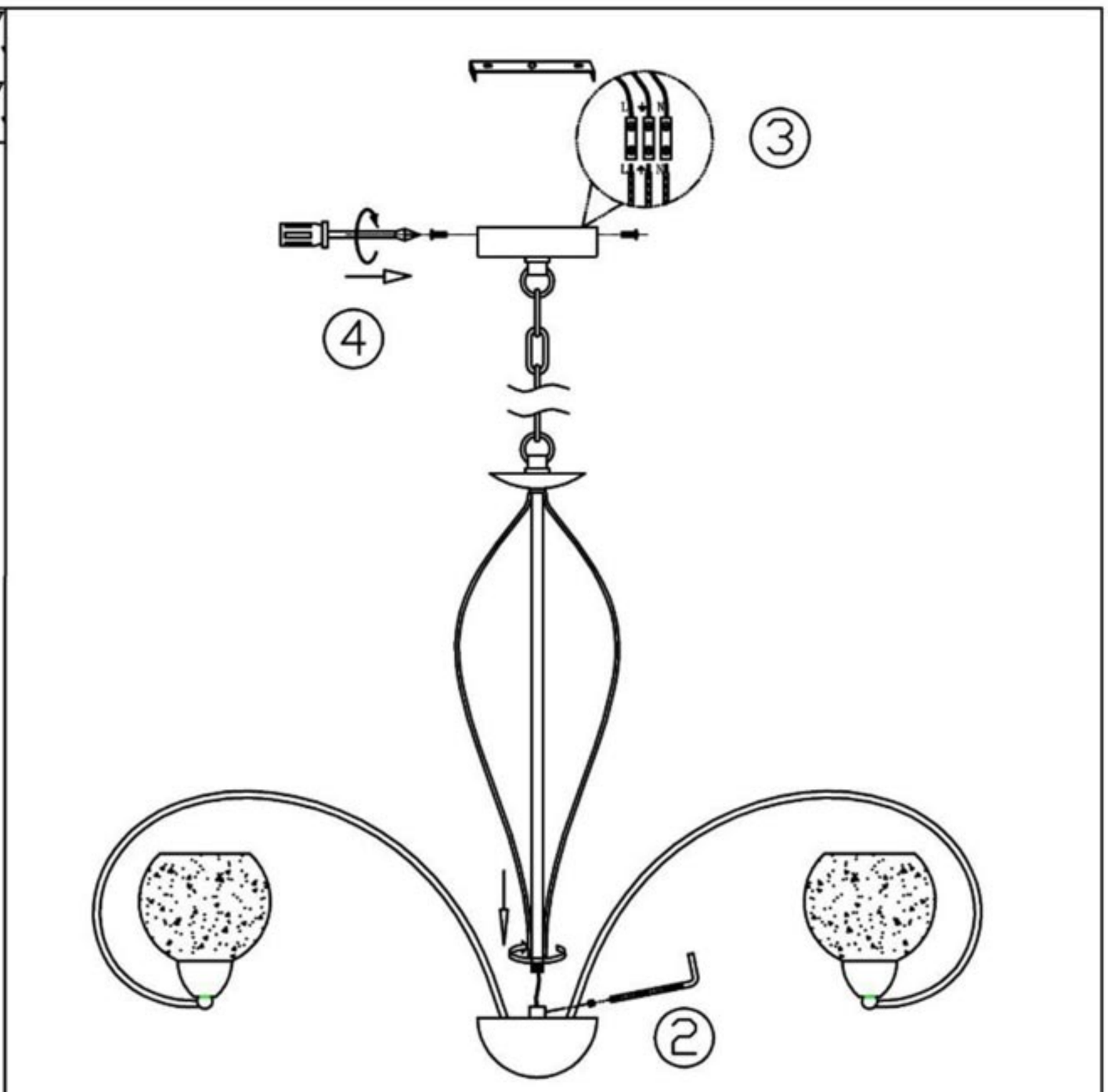
③
④
②

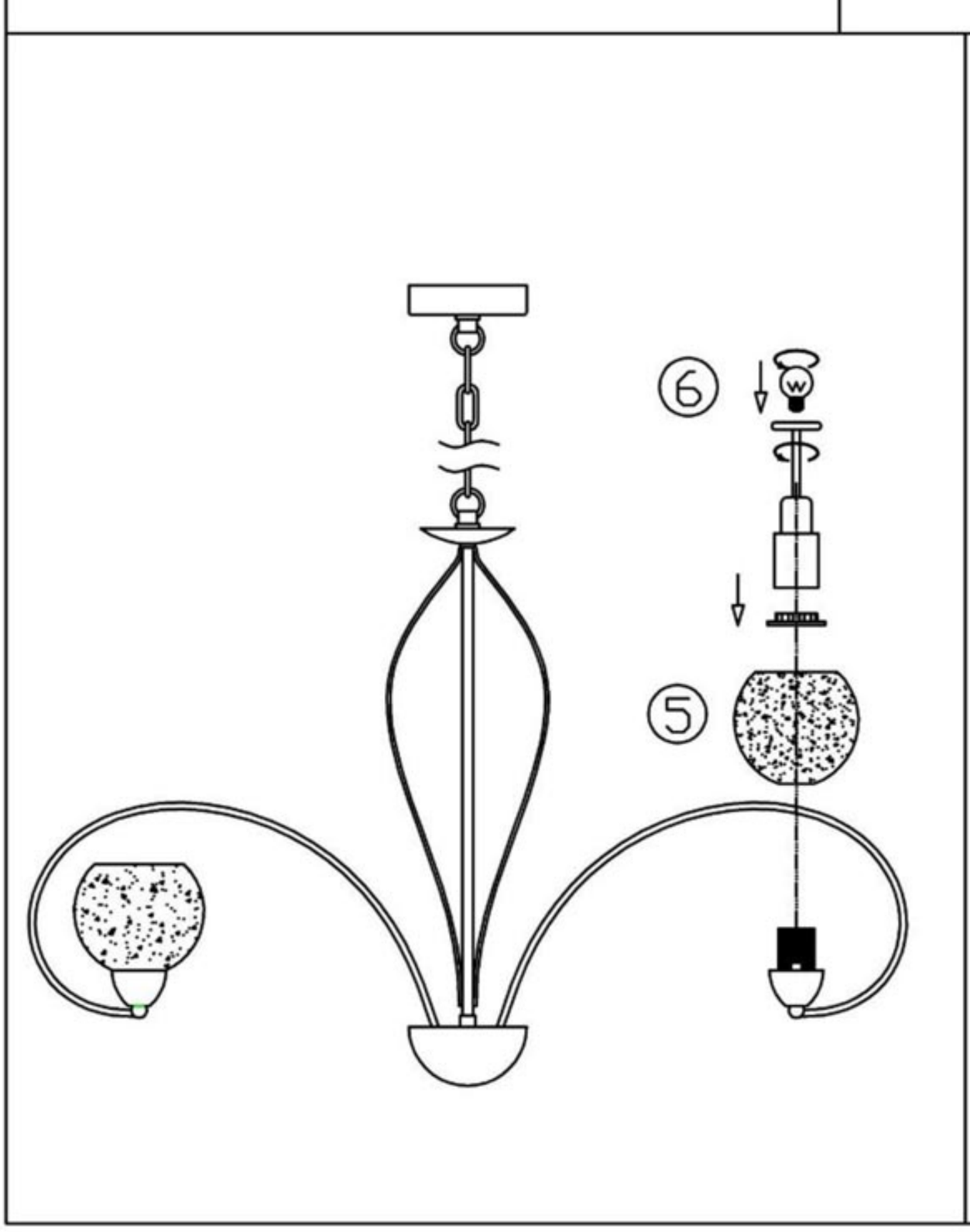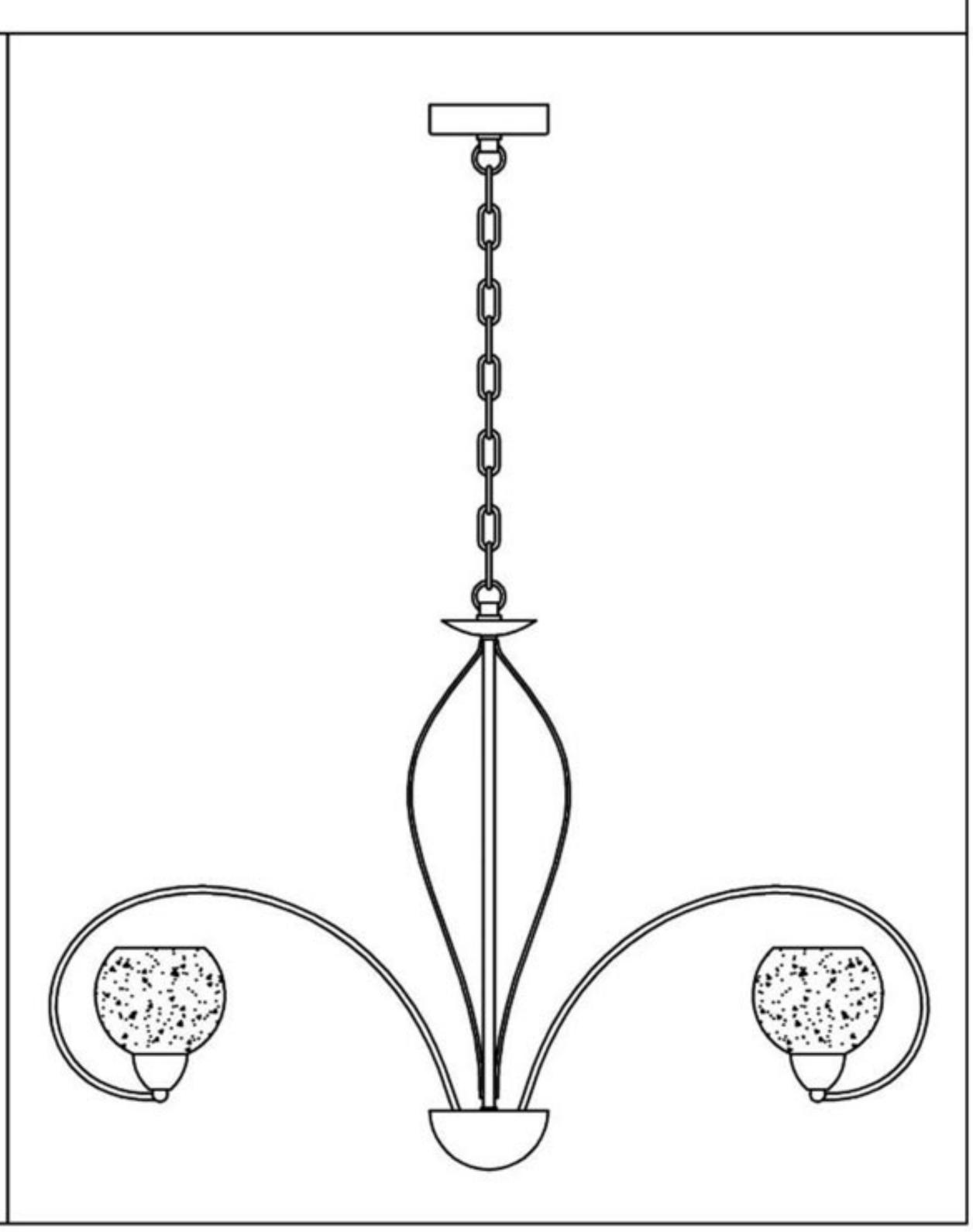
⑥
W
⑤